SONDERMANN
PUMPS • FILTER TECHNOLOGY

MAGSON MM

Magnetically coupled centrifugal pumps made of steel

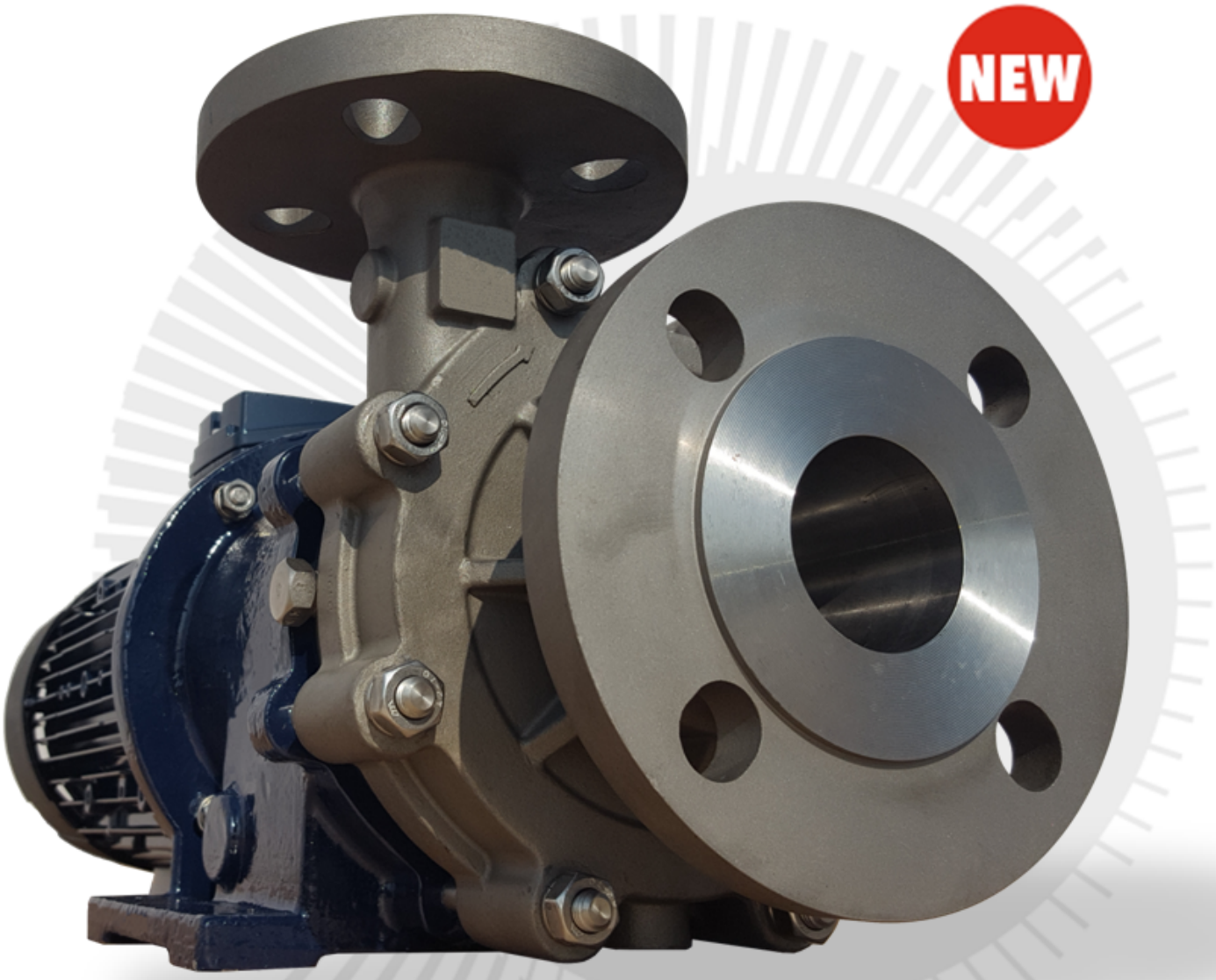

MORE THAN 50 YEARS

SONDERMANN Competence in pump and filter technologies

A FLUX COMPANY

Overview of new metallic MAGSON products

MM	Type	Suction Port	Discharge Port
Size 1	4/75	DN25	DN20
	6/90		
	8/100		
Size 2	4/130	DN40	DN25
	8/175		
	11/200		
Size 3	9/260	DN50	DN32
	14/340		
	19/390		
Size 4	14/450	DN50	DN40
	19/490		
	24/520		
Size 5	23/525	DN65	DN50
	27/550		
	32/575		
	36/600		

Characteristic curves MM

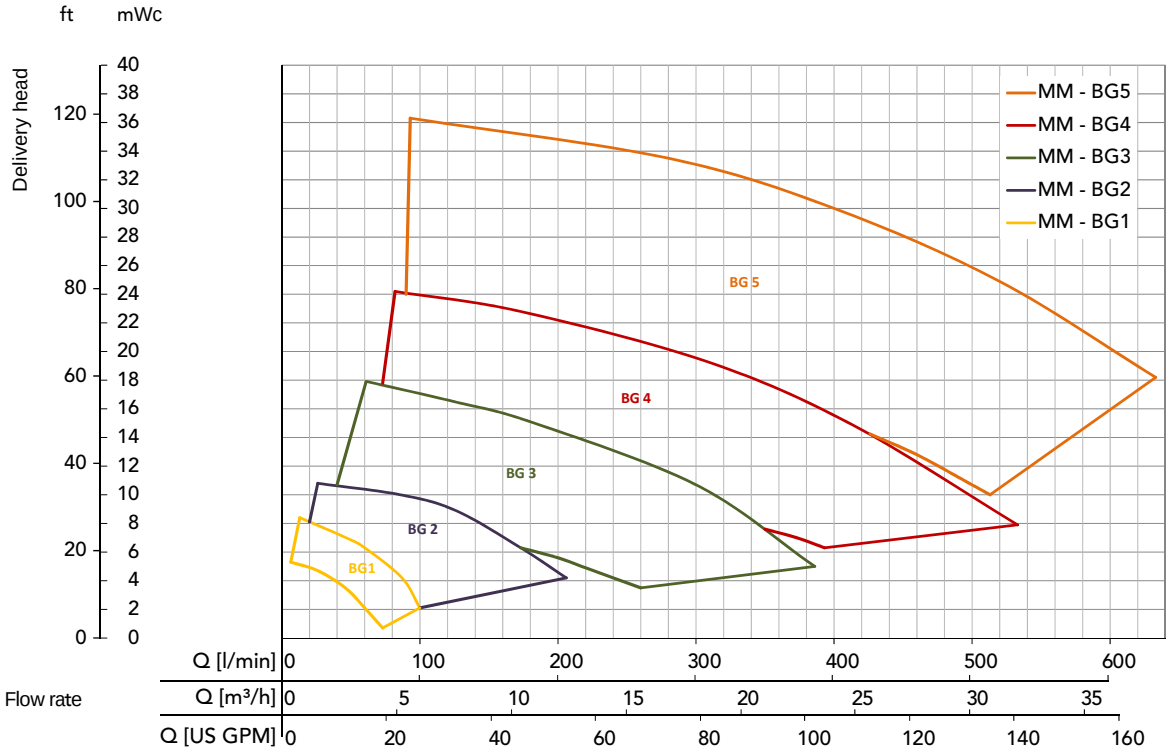

For technical data of all MM pump types see page 7 foll.

Always on the safe side!

If plastics cannot be used – metall MAGSON MM pumps are the perfect solution for these cases.

Conventionally operating centrifugal pumps with wear-resistant shaft seals reliably requires a high degree of technical and financial expenditure, particularly in the case of highly aggressive media. The availability of the plant is also reduced by the regularly required maintenance cycles.

The advantage of sealless, magnetically coupled centrifugal pumps: hermetically tight and maintenance-free

The externally rotating drive magnet transmits the motor force without contact to the inner magnet and thus to the impeller (see graphic below). As a result, a continuous shaft is not required, and therefore no wear-resistant shaft seal is required. The pump chamber and drive are hermetically separated from each other by spacer can. Leackage is impossible, the pumps are maintenance-free.

MAGSON MM

MAGSON magnetically centrifugal pumps of type MM in metallic design are always used when plastics are at their limit.

The MAGSON MM is available alongside the standardized stainless steel 1.4401 in many other metallic designs such as Hastelloy or Titanium. Contact us if you have a special requirement - we will find the right solution for you.

Ex Optional available

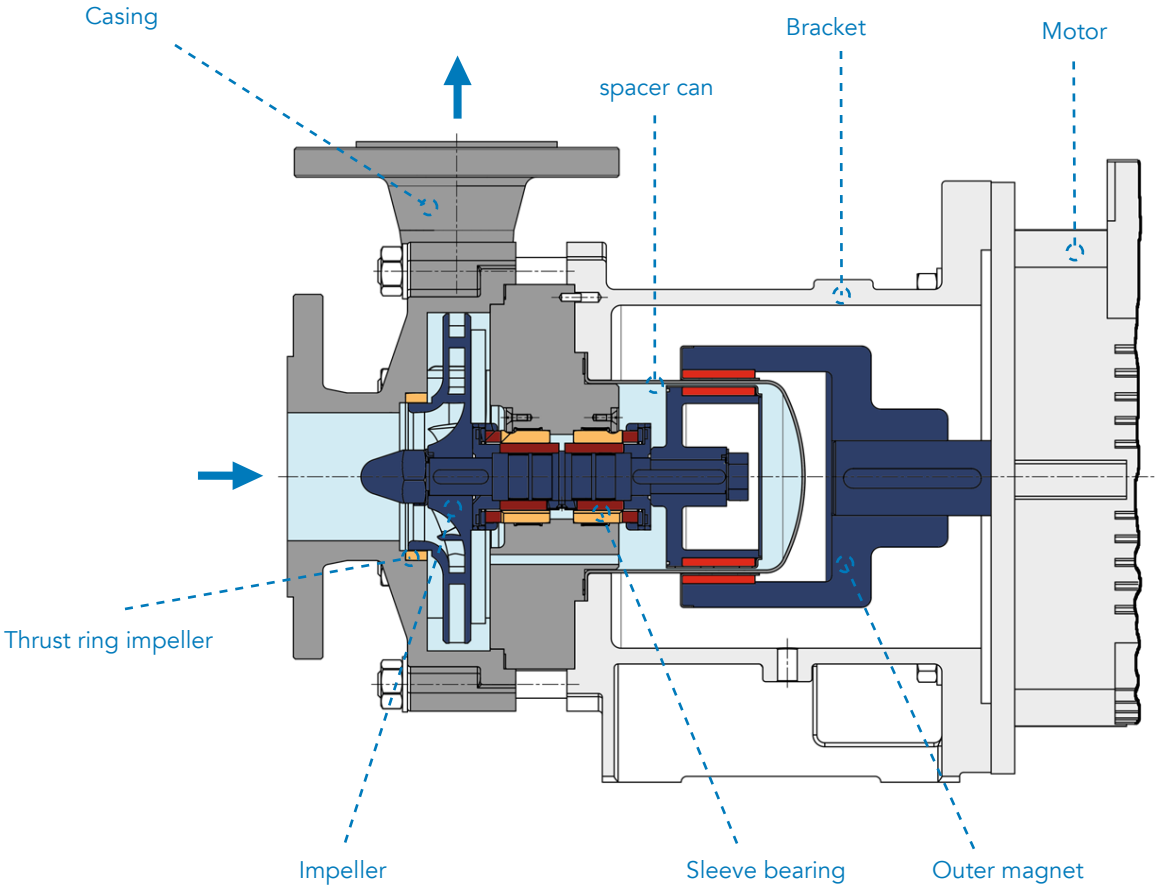

The right material for each fluid

Whatever you want to deliver, we can offer you the appropriate combination of materials based upon concentration and temperature of the fluid.

Component	Symbol	Material
Components in contact with fluid	1.4401	X5CrNiMo17-12-2 (AISI, V4A)
	2.4819	NiMo16Cr15W (Hastelloy® C276)
	2.4858	NiCr21Mo (Incoloy 825)
	SIC	Siliciumcarbide
	C	Carbon
	WC	Wolframcarbide
Seals	EPDM	Ethylen-Propylen-Dien-Kautschuk
	FKM	Fluororubber
	FEP	FEP-coated FKM
	FFKM	Kalrez® or similar
	PTFE	Gylon® or similar

Choice of materials and type codes

The following table includes the materials of components and seals available. Please ask us to help you find the appropriate materials for the fluid to be delivered.

The type name of your MAGSON pump is made up of the material code and the features of the specific components. It consists of 8 positions (see the example below).

● Standard (short time delivery) o possible configuration - not available

Component	Casing, Impeller			Seals						Bearing					Design Connections			Size	Motor capacity	Motor		Power supply frequency	
Material	Stainless steel AISI 316	Hastelloy C	Incoloy 825	FKM	FFKM	Gylon® or similar	EPDM	FEP	PTFE	Carbon	PTFEC	PTFEG	SiC	Wolframcarbide	Thread / NPT-Thread	DIN / ANSI	JIS 10K	Max. Delivery head / max. Flow rate refer to technical details	Motor power in kW, refer to technical details	For 1 ~, 230 VAC	For 3~, 230/400, 400/690 VAC	50 Hz	60 Hz
BG1	●	o	o	●	o	o	o	o	o	●	o	o	●	o	o	●	o			o	●	●	o
BG2	●	o	o	●	o	o	o	o	o	●	o	o	●	o	-	●	o			o	●	●	o
BG3	●	o	o	●	o	o	o	o	o	●	o	o	●	o	-	●	o			-	●	●	o
BG4	●	o	o	●	o	o	o	o	o	●	o	o	●	o	-	●	o			-	●	●	o
BG5	●	o	o	●	o	o	o	o	o	o	o	o	●	o	-	●	o			-	●	●	o
Code	V	H	G	F	P	G	B	D	T	C	P	G	S	W	G	U	J			1	3	5	6

MM — V — F — SC — U — 15/200 – 7,5 — 3 — 5

All advantages of MAGSON pumps at a glance

Maximum safety:

- no shaft seal for hermetically sealed chemical resistance due to ETFE (better than PVDF)
- ATEX execution available on request
- AC motors with thermal protection to avoid damage in case of motor overload
- Temperatures up to 120°C in standard design and up to 300°C possible on request
- Motor may be exchanged while the system is hermetically sealed

Maximum reliability:

- sturdy construction
- spacer can made of one piece for higher resistance
- spacer can with elipsoid shape for higher pressures
- flown-around shaft seat to cool the sleeve bearing (types 4 and higher)

Maximum efficiency:

- Spiral casing for best efficiency and ultra-low energy consumption
- competent advice to find the perfectly dimensioned design of your MAGSON pump
- motors also available with frequency converter for the optimum operating point at all times

Maximum flexibility:

- Various metallic materials for all kind of applications
- requiring no maintenance
- CARTRIDGE UNIT for easy and fast maintenance
- IEC standard motors for fast worldwide availability
- three-phase motor with PTC as standard for
- three-phase motors with PTC in standard for running with frequency converter

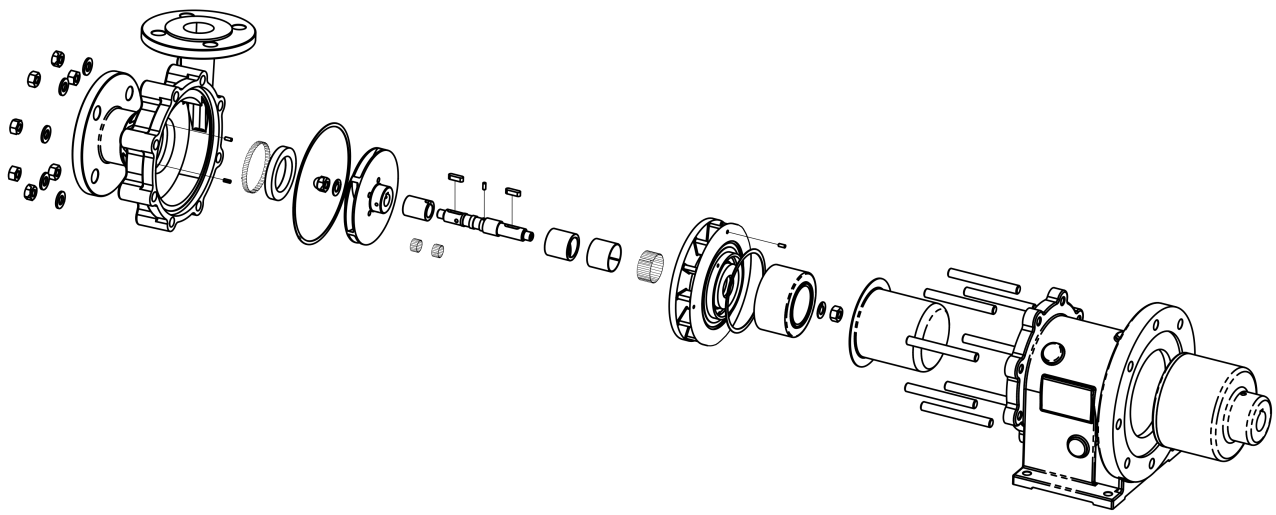

Figure: MM - BG1-4

MM pump type 1

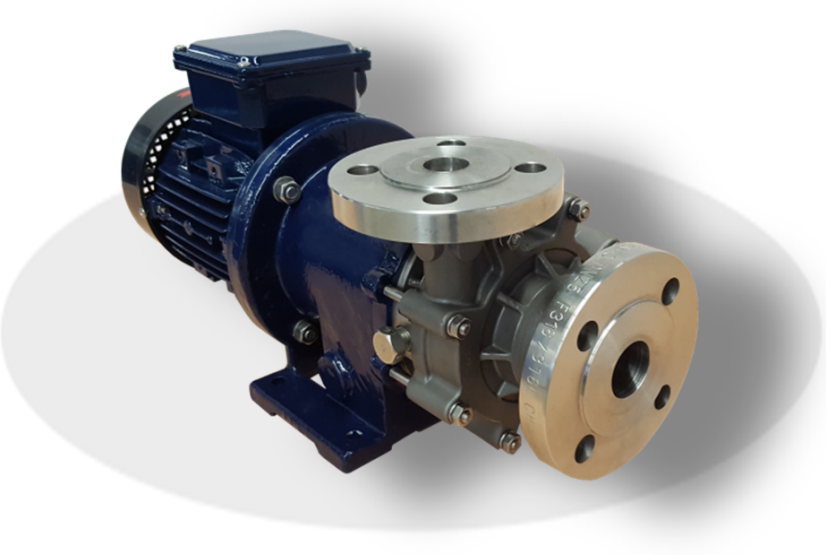

- Without shaft seal
- Robust and casted casing
- CARTRIDGE UNIT for fast and easy maintenance
- Temperature up to 120°C (higher temperatures are possible)
- Close coupled, single stage, back-pullout-design
- Universal DIN/ANSI connection
- Suction port DN25
- Discharge port DN20

Characteristic curve

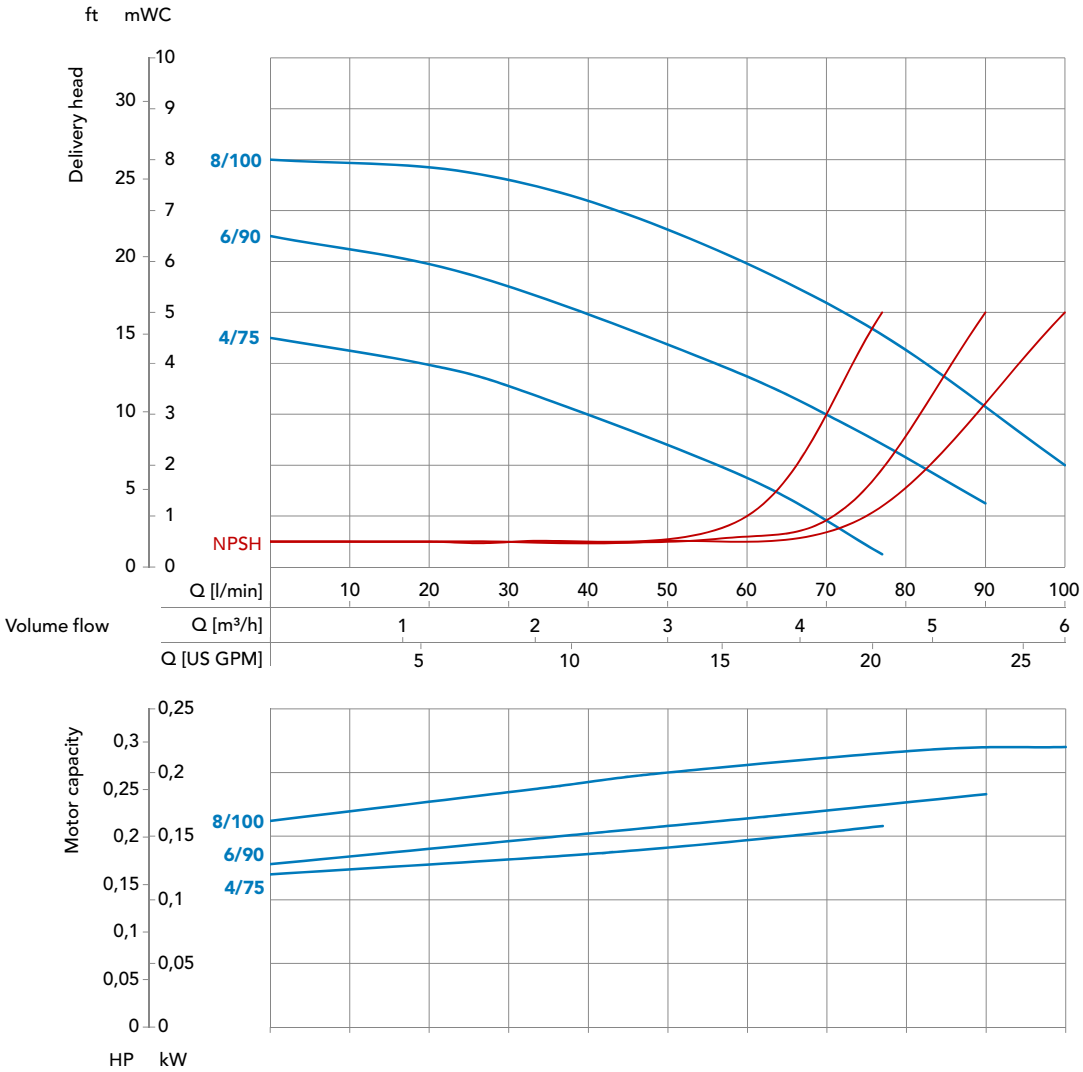

Determined with water of 20 °C; measured values ± 10 %

Technical Data MM BG1

Type	4/75		6/90		8/100	
Material	Stainless Steel 1.4401 (AISI 316)					
Max. delivery head [mWC] 50 Hz	4		6		8	
Max. volume flow in [l/min] 50Hz	75		90		100	
Max. density in [g/cm³] 50 Hz *	2,5	3,3	2	3	1,7	2,5
Motor capacity [kW]	0,37	0,55	0,37	0,55	0,37	0,55
Current rating (400V, 50Hz) [A] **	0,96	1,41	0,96	1,41	0,96	1,41
Rated speed in [rpm] 50 Hz	3000					
Suction port	DN25					
Discharge port	DN20					
Voltage in [V] ***	230/400					
Protection class	IP55					
Max. flow velocity [m/s]	Suction side 1 / discharge side3					
Max. system pressure [bar]	25 / optional 50					
Max. Temperature [°C]	120 / optional up to 300					

* approx. at max. volume flow (higher density possible when flow rate is reduced)
** depends on motor supplier
*** other voltages on request

Dimensions [mm]

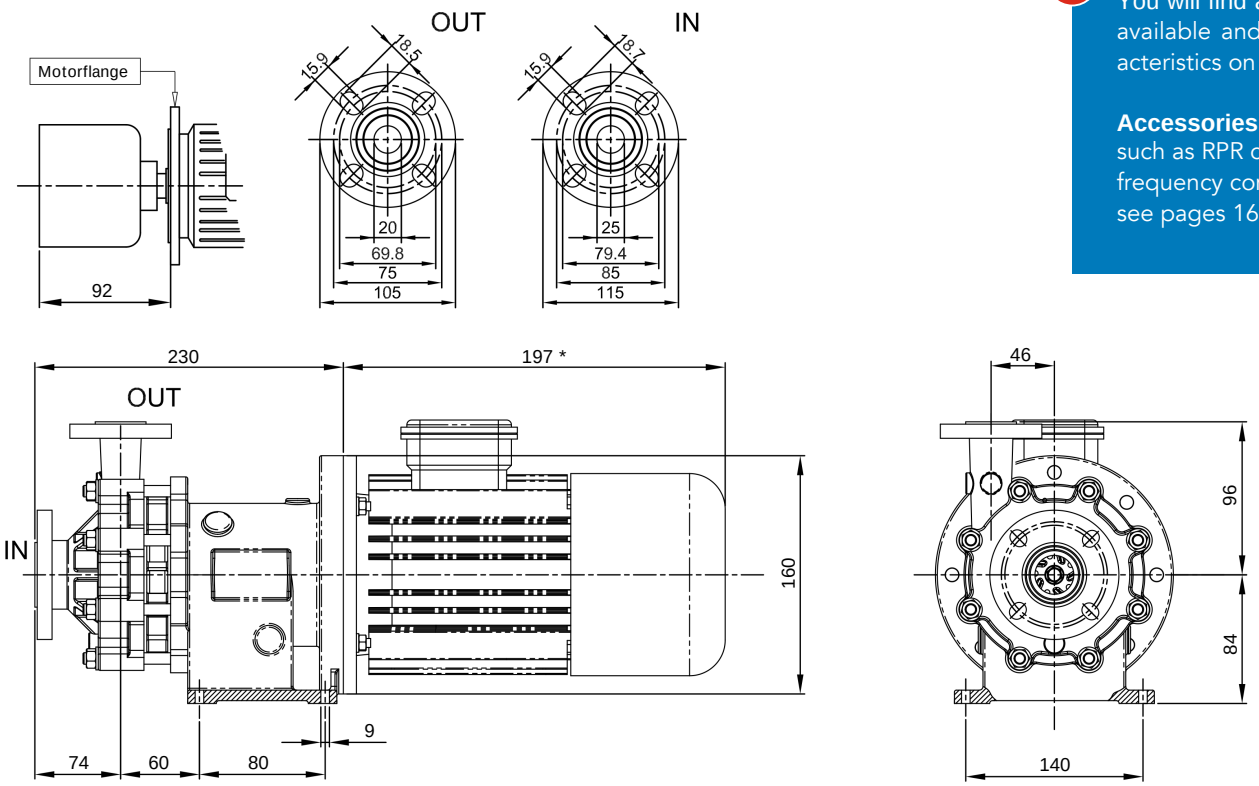

* Motor dimensions may differ according to manufacture.

Materials
You will find all materials available and their characteristics on page 4.

Accessories
such as RPR control and frequency converters see pages 16 to 17.

MM pump type 2

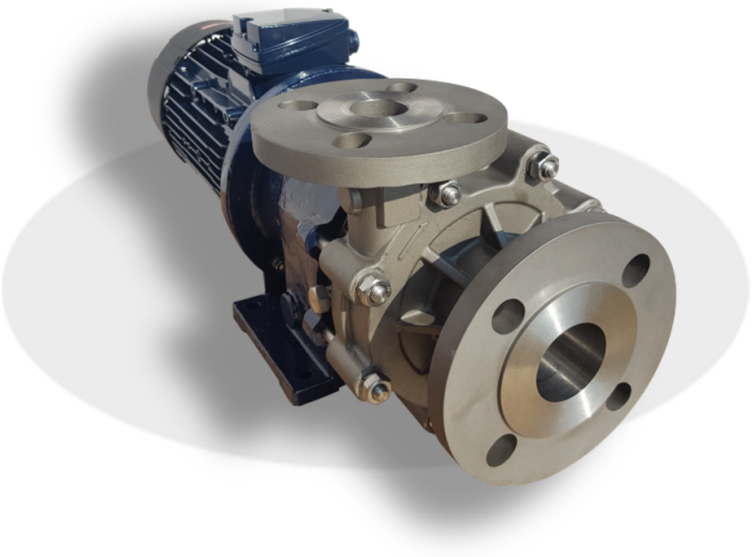

- Without shaft seal
- Robust and casted casing
- CARTRIDGE UNIT for fast and easy maintenance
- Temperature up to 120°C (higher temperatures are possible)
- Close coupled, single stage, back-pullout-design
- Universal DIN/ANSI connection
- Suction port DN40
- Discharge port DN25

Characteristic curve

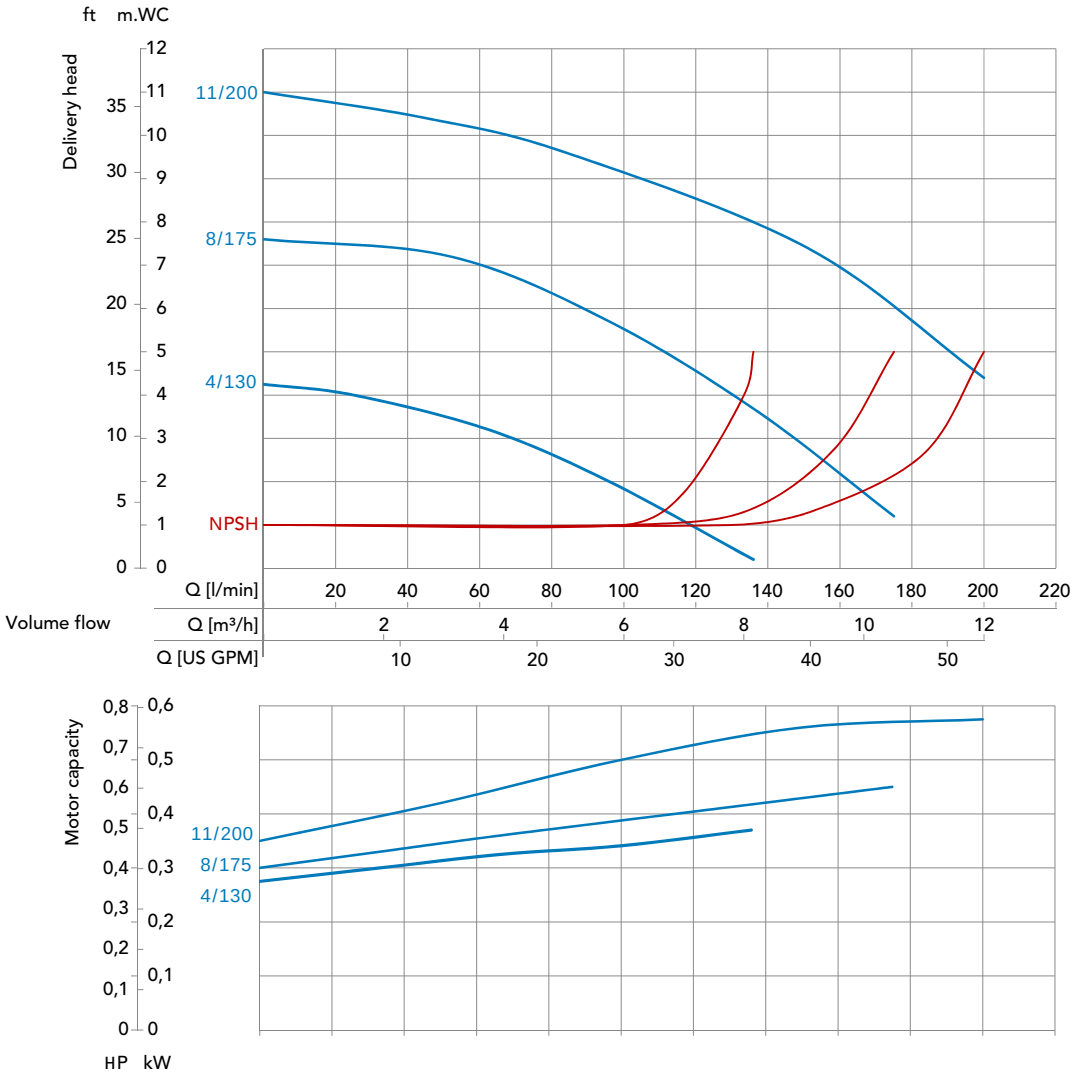

Determined with water of 20 °C; measured values ± 10 %

Technical Data MM BG2

Type	4/130		8/175		11/200	
Material	Stainless Steel 1.4401 (AISI 316)					
Max. delivery head [mWC] 50 Hz	4		8		11	
Max. volume flow in [l/min] 50Hz	130		175		200	
Max. density in [g/cm³] 50 Hz *	2	2,8	1,6	2,4	1,3	1,9
Motor capacity [kW]	0,75	1,1	0,75	1,1	0,75	1,1
Current rating (400V, 50Hz) [A] **	1,56	2,25	1,56	2,25	1,56	2,25
Rated speed in [rpm] 50 Hz	3000					
Suction port	DN40					
Discharge port	DN25					
Voltage in [V] ***	230/400					
Protection class	IP55					
Max. flow velocity [m/s]	Suction side 1 / discharge side3					
Max. system pressure [bar]	25 / optional 50					
Max. Temperature [°C]	120 / optional up to 300					

* approx. at max. volume flow (higher density possible when flow rate is reduced)
** depends on motor supplier
*** other voltages on request

Dimensions [mm]

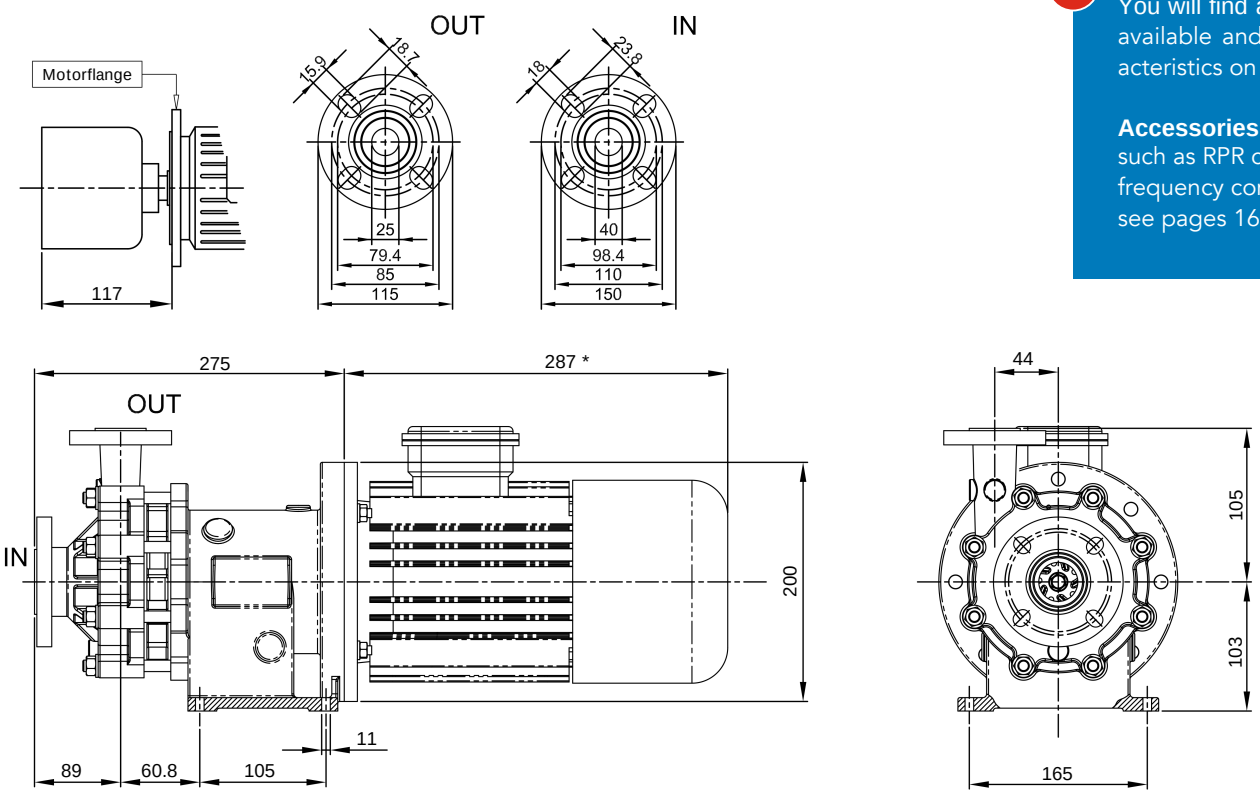

* Motor dimensions may differ according to manufacture.

Materials
You will find all materials available and their characteristics on page 4.

Accessories
such as RPR control and frequency converters see pages 16 to 17.

MM pump type 3

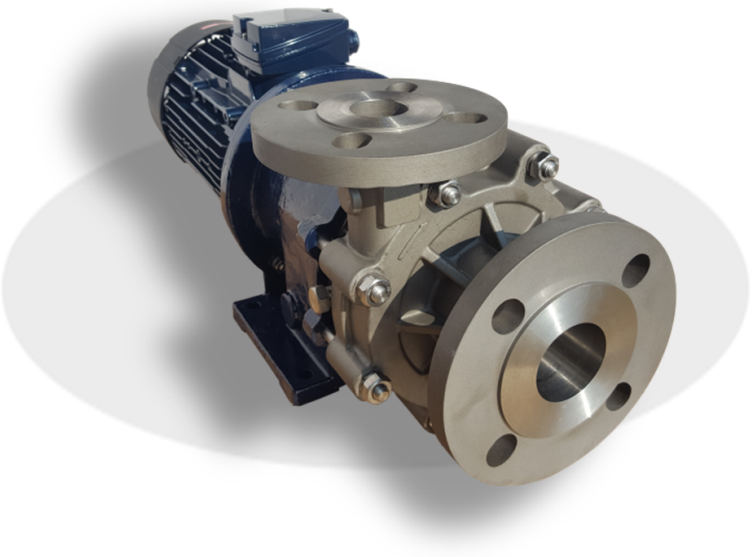

- Without shaft seal
- Robust and casted casing
- CARTRIDGE UNIT for fast and easy maintenance
- Temperature up to 120°C (higher temperatures are possible)
- Close coupled, single stage, back-pullout-design
- Universal DIN/ANSI connection
- Suction port DN50
- Discharge port DN32

Characteristic curve

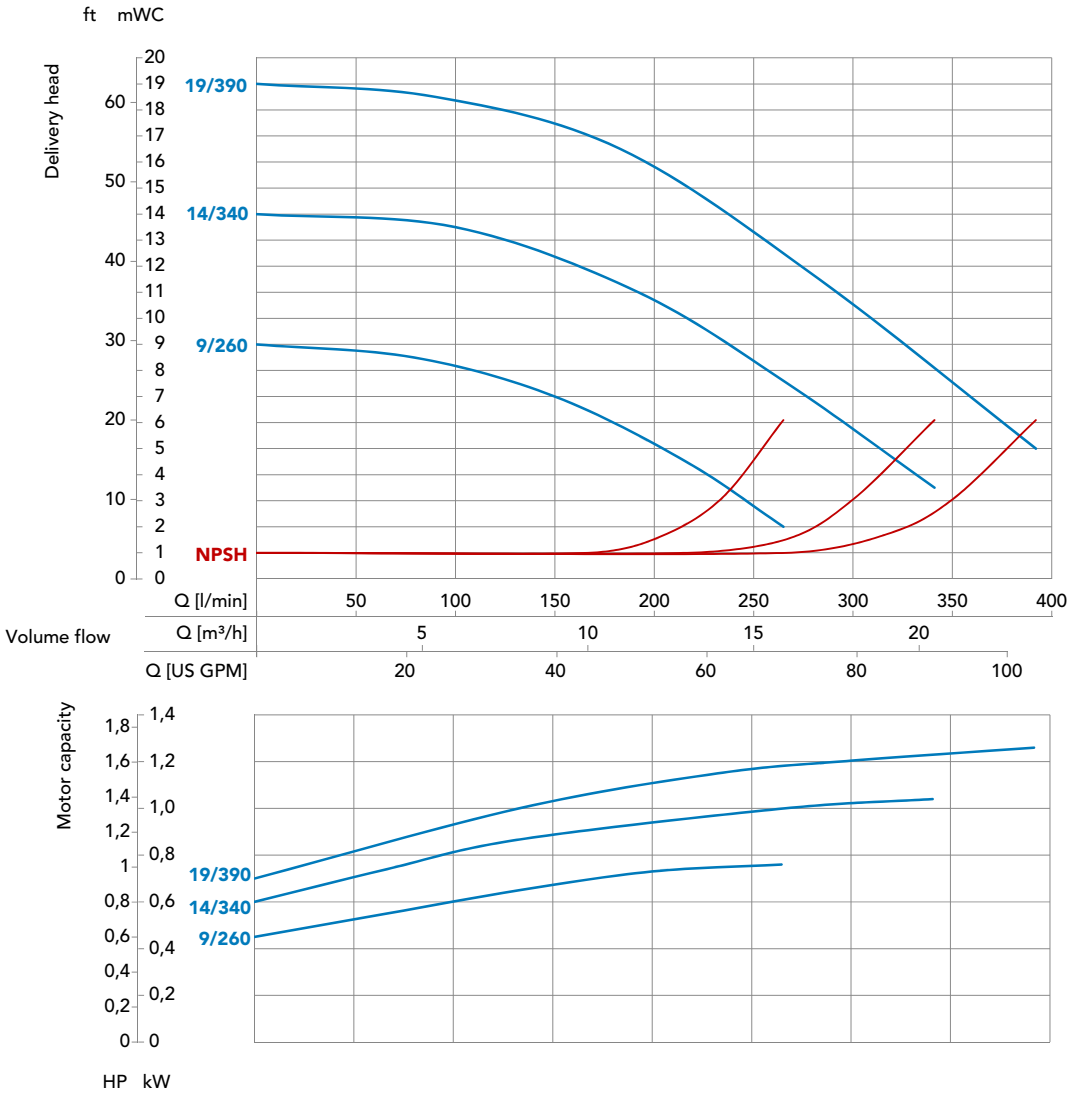

Determined with water of 20 °C; measured values ± 10 %

Technical Data MM BG3

Type	9/260		14/340		19/390	
Material	Stainless Steel 1.4401 (AISI 316)					
Max. delivery head [mWC] 50 Hz	9		14		19	
Max. volume flow in [l/min] 50Hz	260		340		390	
Max. density in [g/cm³] 50 Hz *	1,9	2,8	1,4	2,1	1,2	1,7
Motor capacity [kW]	1,5	2,2	1,5	2,2	1,5	2,2
Current rating (400V, 50Hz) [A] **	3	4,2	3	4,2	3	4,2
Rated speed in [rpm] 50 Hz	3000					
Suction port	DN50					
Discharge port	DN32					
Voltage in [V] ***	230/400					
Protection class	IP55					
Max. flow velocity [m/s]	Suction side 1 / discharge side3					
Max. system pressure [bar]	25 / optional 50					
Max. Temperature [°C]	120 / optional up to 300					

* approx. at max. volume flow (higher density possible when flow rate is reduced)
** depends on motor supplier
*** other voltages on request

Dimensions [mm]

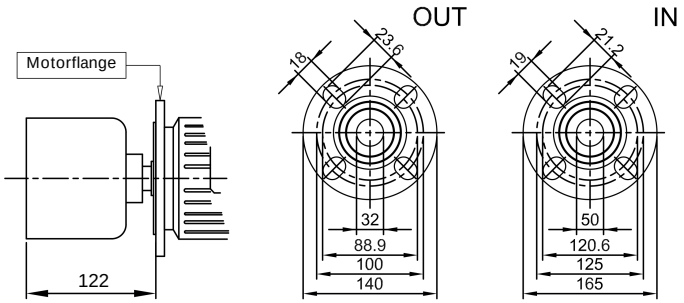

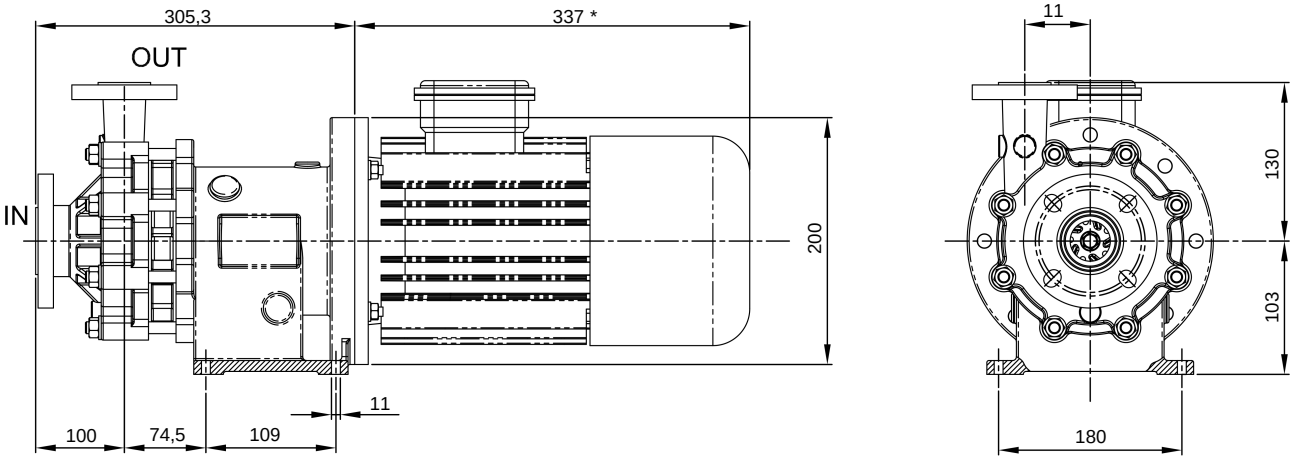

* Motor dimensions may differ according to manufacture.

Materials
You will find all materials available and their characteristics on page 4.

Accessories
such as RPR control and frequency converters see pages 16 to 17.

MM pump type 4

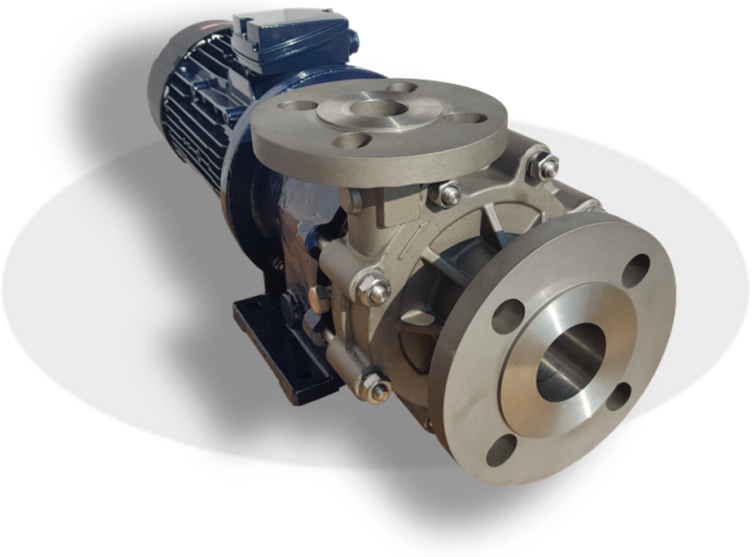

- Without shaft seal
- Robust and casted casing
- CARTRIDGE UNIT for fast and easy maintenance
- Temperature up to 120°C (higher temperatures are possible)
- Close coupled, single stage, back-pullout-design
- Universal DIN/ANSI connection
- Suction port DN50
- Discharge port DN40

Characteristic curve

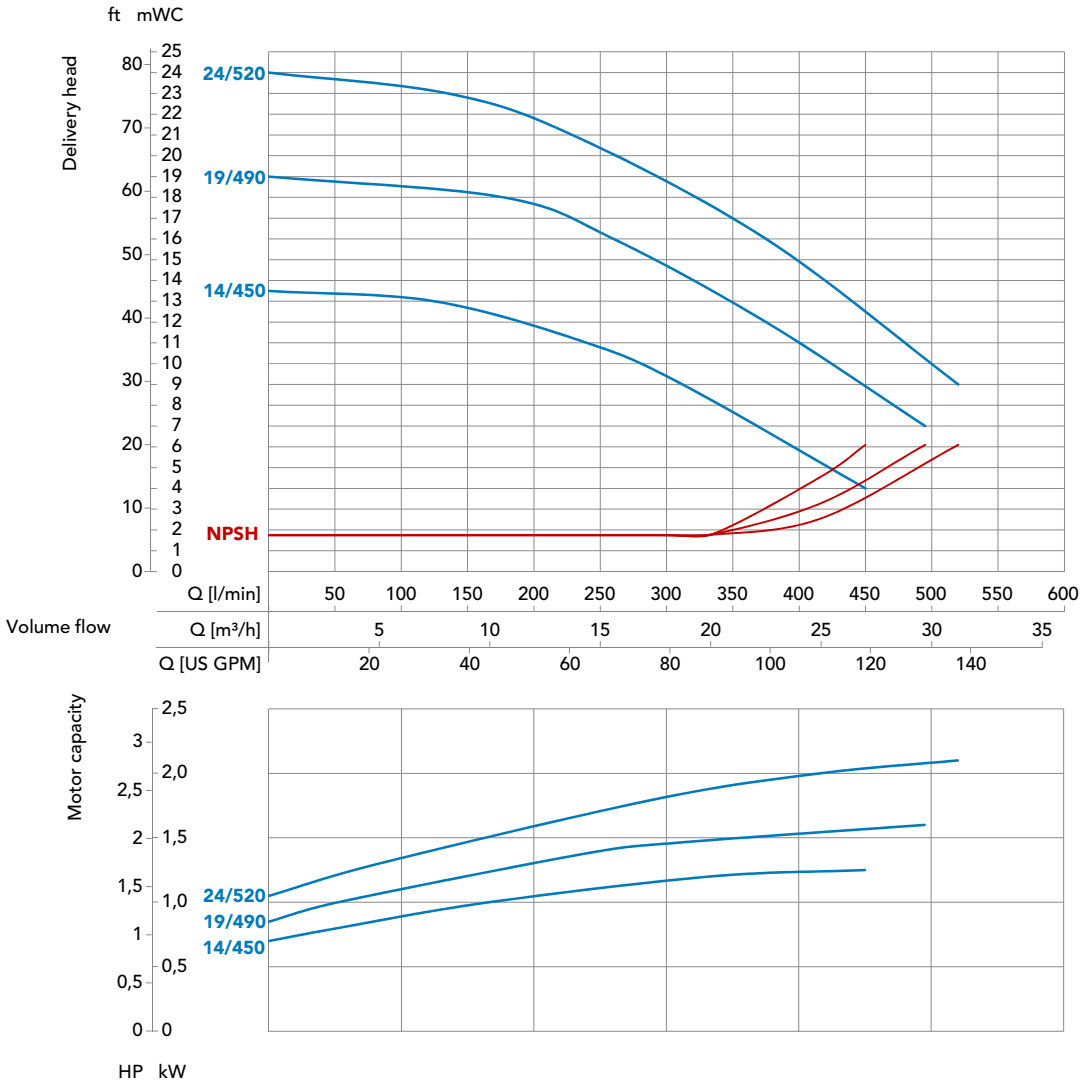

Determined with water of 20 °C; measured values ± 10 %

Technical Data MM BG4

Type	14/450		19/490		24/520	
Material	Stainless Steel 1.4401 (AISI 316)					
Max. delivery head [mWC] 50 Hz	14		19		24	
Max. volume flow in [l/min] 50Hz	450		490		520	
Max. density in [g/cm³] 50 Hz *	2,4	3,2	1,8	2,5	1,4	1,9
Motor capacity [kW]	3	4	3	4	3	4
Current rating (400V, 50Hz) [A] **	5,6	7,3	5,6	7,3	5,6	7,3
Rated speed in [rpm] 50 Hz	3000					
Suction port	DN50					
Discharge port	DN40					
Voltage in [V] ***	230/400					
Protection class	IP55					
Max. flow velocity [m/s]	Suction side 1 / discharge side3					
Max. system pressure [bar]	25 / optional 50					
Max. Temperature [°C]	120 / optional up to 300					

* approx. at max. volume flow (higher density possible when flow rate is reduced)
** depends on motor supplier
*** other voltages on request

Dimensions [mm]

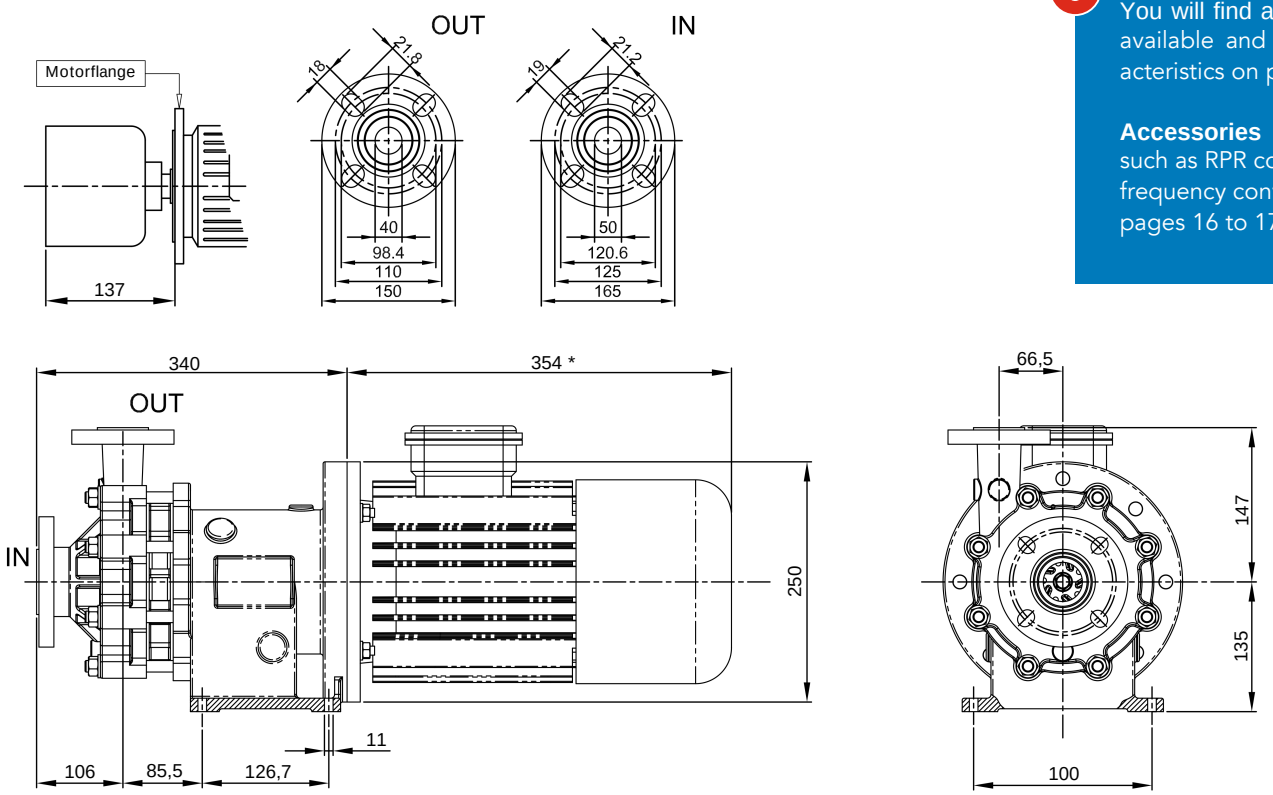

Materials
You will find all materials available and their characteristics on page 4.

Accessories
such as RPR control and frequency converters see pages 16 to 17.

* Motor dimensions may differ according to manufacture.

MM pump type 5

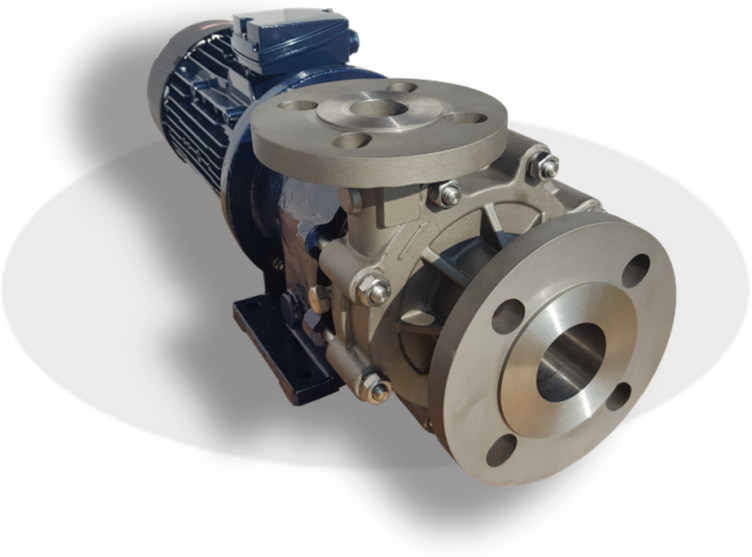

- Without shaft seal
- Robust and casted casing
- CARTRIDGE UNIT for fast and easy maintenance
- Temperature up to 120°C (higher temperatures are possible)
- Close coupled, single stage, back-pullout-design
- Universal DIN/ANSI connection
- Suction port DN65
- Discharge port DN50

Characteristic curve

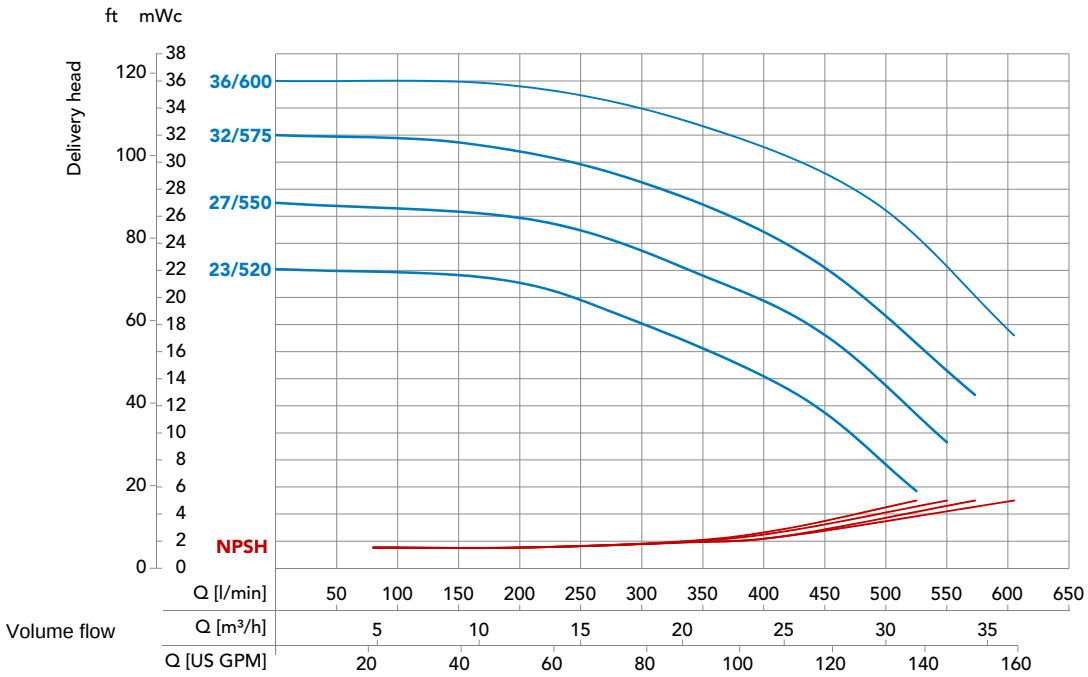

Determined with water of 20 °C; measured values ± 10 %

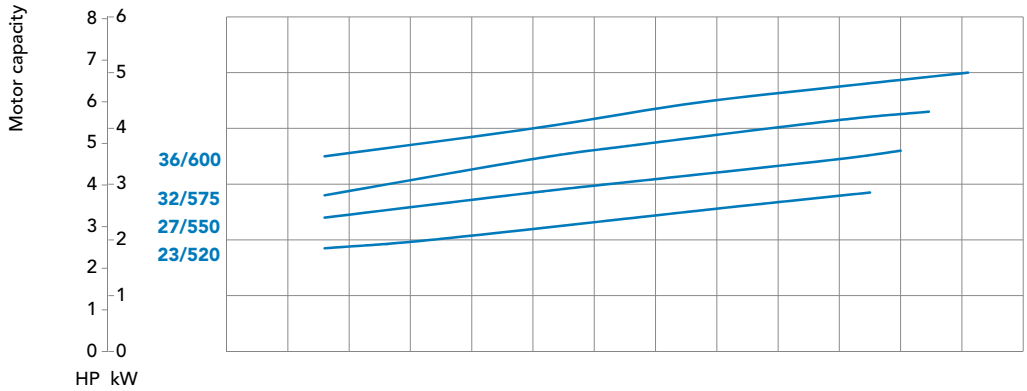

Technical Data MM BG5

Type	23/525		27/550		32/575		36/600	
Material	Edelstahl 1.4401 (AISI 316)							
Max. delivery head [mWC] 50 Hz	23		27		32		36	
Max. volume flow in [l/min] 50Hz	525		550		575		600	
Max. density in [g/cm³] 50 Hz *	1,9	2,6	1,6	2,2	1,3	1,8	1,1	1,5
Motor capacity [kW]	5,5	7,5	5,5	7,5	5,5	7,5	5,5	7,5
Current rating (400V, 50Hz) [A] **	9,9	13,1	9,9	13,1	9,9	13,1	9,9	13,1
Rated speed in [rpm] 50 Hz	3000							
Suction port	DN65							
Discharge port	DN50							
Voltage in [V] ***	400/690							
Protection class	IP55							
Max. flow velocity [m/s]	Saugseitig 1 / druckseitig 3							
Max. system pressure [bar]	25 / optional 50							
Max. Temperature [°C]	120 / optional bis 300							

* approx. at max. volume flow (higher density possible when flow rate is reduced)
** depends on motor supplier
*** other voltages on request

Dimensions [mm]

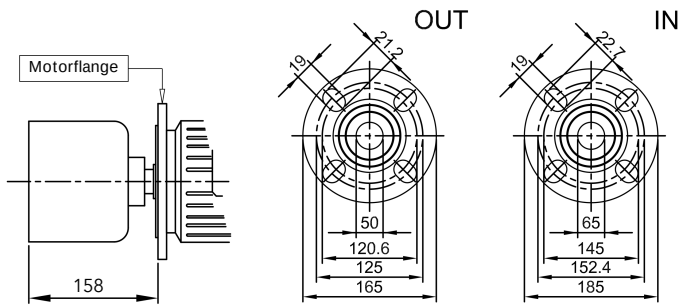

Materials
You will find all materials available and their characteristics on page 4.

Accessories
such as RPR control and frequency converters see pages 16 to 17.

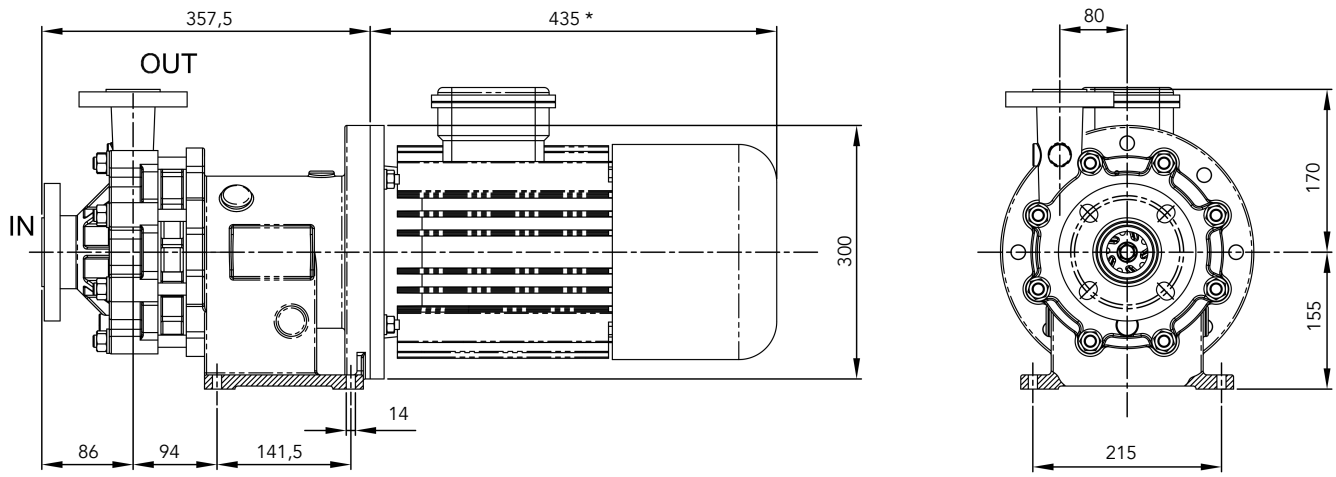

* Motor dimensions may differ according to manufacture.

SFU frequency converter

Universal drive control for utmost efficiency

MAGSON magnetically coupled centrifugal pumps are extremely efficient by nature. Using the SFU frequency converter for optimum adjustment to changing conditions, this efficiency will increase even more.

Thanks to leading-edge control technology, the SFU permanently adjusts the discharge rate to specific requirements. Whenever the rate has to be reduced or the pump has to be operated with changing volume flows, using a frequency converter will save you lots of money. Thus, the power required by a pump running at half speed is only 12% of the original demand. So the system operates with optimum efficiency but saves a lot of energy, especially in part-load operation.

Mounting on top of the motor or wall mounting optionally available.

Special features are:

- standard IP 65 design for installation in the field
- setting of desired values by touch-key panel, potentiometer or I/O interface
- various I/O interfaces and field bus options available

Type	Supply	Power
SFU-K-0,75/1	230 V	0,25 – 0,75 kW
SFU-K-1,5/3	3 × 400 V	0,55 – 1,5 kW
SFU-K-2,2/3	3 × 400 V	2,2 kW
SFU-K-3/3	3 × 400 V	3,0 kW
SFU-K-4,0/3	3 × 400 V	4,0 kW

All MAGSON pumps with three-phase AC motor can be used with frequency converters and have three PTC-resistors each as standard features.

Advantages are:

- optimum use with pumps
- decrease in operating cost by infinitely variable adjustment of the delivery rate actually required
- exceptionally high efficiency within the whole range of speed
- no additional shielded wiring required when being mounted on top of the motor
- trouble-free retrofitting to existing installations because no electrical cabinet required

Calculating example

If you reduce the speed of a MAGSON MA 30/510 pump by 5 Hz, the delivery rate decreases by 12 % but at the same time, the power input falls by 28 % from 2.5 kWh to 1.8 kWh. This means an energy saving of up to 6000 kWh per year!

Customer service and support

We will help you find the right pump and optimum dimensioning of your installation.

On-site analysing

The optimum configuration of pump installations depends on various factors including the fluid to be delivered, the volume flow desired and the delivery head required. Our qualified advisers will be glad to precisely analyse your specific requirements on site and make up the optimum pump system out of the various types, designs, capacities, materials and accessories on offer, including products made by our FLUX parent company or by other suppliers.

Optimum dimensioning of your pump installation

Realizing optimum delivery rates with maximum energy efficiency is nothing like magic at all. You only have to make sure that the pump at any time runs at its optimum operating point. This requires the perfect dimensioning of the pump in accordance with overall specifications of your installation. Make use of our technical advisers' competence to optimize your operating cost and maybe even reduce the necessary investment.

We are always there for you

With more than 50 years of experience in pump and filter technologies, we are at your service for all about delivering fluids – at any time, on the phone but also in person on site.

We are always there for you, and also after sales! Just call us!

Contact us

Thanks to our wide distribution network with 13 sites in Germany, you will always find qualified advisers of SONDERMANN's or our parent company FLUX's at close range.

1 Berlin / Brandenburg
SONDERMANN Pumpen + Filter
GmbH & Co. KG
August-Horch-Strasse 2
D-51149 Cologne
Phone +49 2203 9394-0
info@sondermann-pumpen.de

2 Hamburg / Schleswig-Holstein / Mecklenburg-West Pomerania
Dipl.-Ing. (FH) Dieter Roy
Dorfstrasse 23
D-21514 Klein Pampau
Phone +49 4155 8238100
Mobile +49 172 6287782
d.roy@flux-pumpen.de

3 Hanover / Kassel / Magdeburg
Dipl.-Ing. (FH) Ulrich Poehls
Alte Bemeroder Strasse 122
D-30539 Hanover
Phone +49 511 517151
Mobile +49 172 6287783
u.poehls@flux-pumpen.de

4 Bremen / Munster
Dipl.-Ing. (FH) Mathias Reimer
Am Zwickenbach 18
D-49324 Melle
Phone +49 5422 9227480
Mobile +49 170 1802546
m.reimer@flux-pumpen.de

5.1 Southwest North Rhine-Westphalia
Dipl.-Ing. (FH)
Joachim Kehrenbach
August-Horch-Strasse 2
D-51149 Cologne
Mobile +49 173 7162844
j.kehrenbach@sondermann-pumpen.de

5.2 Northeast North Rhine-Westphalia
Ralf Boesl
August-Horch-Strasse 2
D-51149 Cologne
Mobile +49 173 6055547
r.boesl@sondermann-pumpen.de

6 Hesse
Robert Hoefling
Odenwaldring 25
D-63500 Seligenstadt
Phone +49 6182 1583
Mobile +49 177 5834969
r.hoefling@flux-pumpen.de

7.1 North Baden-Württemberg
Martin Reichert
Unterer Steinweg 52/1
D-75438 Knittlingen
Phone +49 7043 952-9757
Mobile +49 174 1665762
m.reichert@flux-pumpen.de

7.2 South Baden-Württemberg
Dipl.-Ing. (FH) Dieter Roeder
Westendstrasse 4
D-75015 Bretten
Phone +49 7252 5049792
Mobile +49 172 1014217
d.roeder@flux-pumpen.de

At your service all over the world
SONDERMANN pumps and filters are available worldwide. The contact data of our international agencies and representatives are listed at **www.sondermann-pumpen.de**. You may also contact us at our Cologne head office by phone no. **+49 2203 9394-0** or send an email to **info@sondermann-pumpen.de**.

8 South Bavaria
Tobias Anton
Kornblumenstrasse 5
D-86637 Wertingen
Mobile +49 172 6287784
t.anton@flux-pumpen.de

9 North Bavaria
Dipl.-Ing. (FH) Wolfgang Schauer
Am Weinberg 2
D-91180 Heideck
Phone +49 9177 4852705
Mobile +49 172 6287781
w.schauer@flux-pumpen.de

10 Rhineland-Palatinate / Saarland / Nordbaden
Frank Schorn
Fliederstrasse 19
D-66773 Schwalbach
Phone +49 6834 567250
Mobile +49 172 6259223
f.schorn@flux-pumpen.de

16 Central Germany
Dipl.-Ing. (FH) Hendrik Mueller
Am Kirschrain 5
D-06193 Petersberg
Phone +49 34606 290321
Mobile +49 172 1324674
h.mueller@flux-pumpen.de

FLUX
Mehr als nur Pumpen

For more than 50 years now, SONDERMANN has been your competent partner for the wide range of FLUX pumps made by our parent company. Known for their excellent quality, FLUX pumps are available as barrel and container pumps to submersible centrifugal and eccentric screw pumps to pneumatic diaphragm pumps, mixers, liquid-flow meters, including a wide variety of accessories.

For further information on FLUX pumps and products, visit us at www.flux-pumpen.com

SONDERMANN
PUMPS • FILTER TECHNOLOGY

SONDERMANN
Pumpen + Filter GmbH & Co. KG

August-Horch-Strasse 2 · D-51149 Cologne
P. O. Box 920101 · D-51151 Cologne

Phone +49 2203 9394-0
Fax +49 2203 9394-48

info@sondermann-pumpen.de
www.sondermann-pumpen.de

SMM08/2017–1EN · Technical changes reserved

A FLUX COMPANY